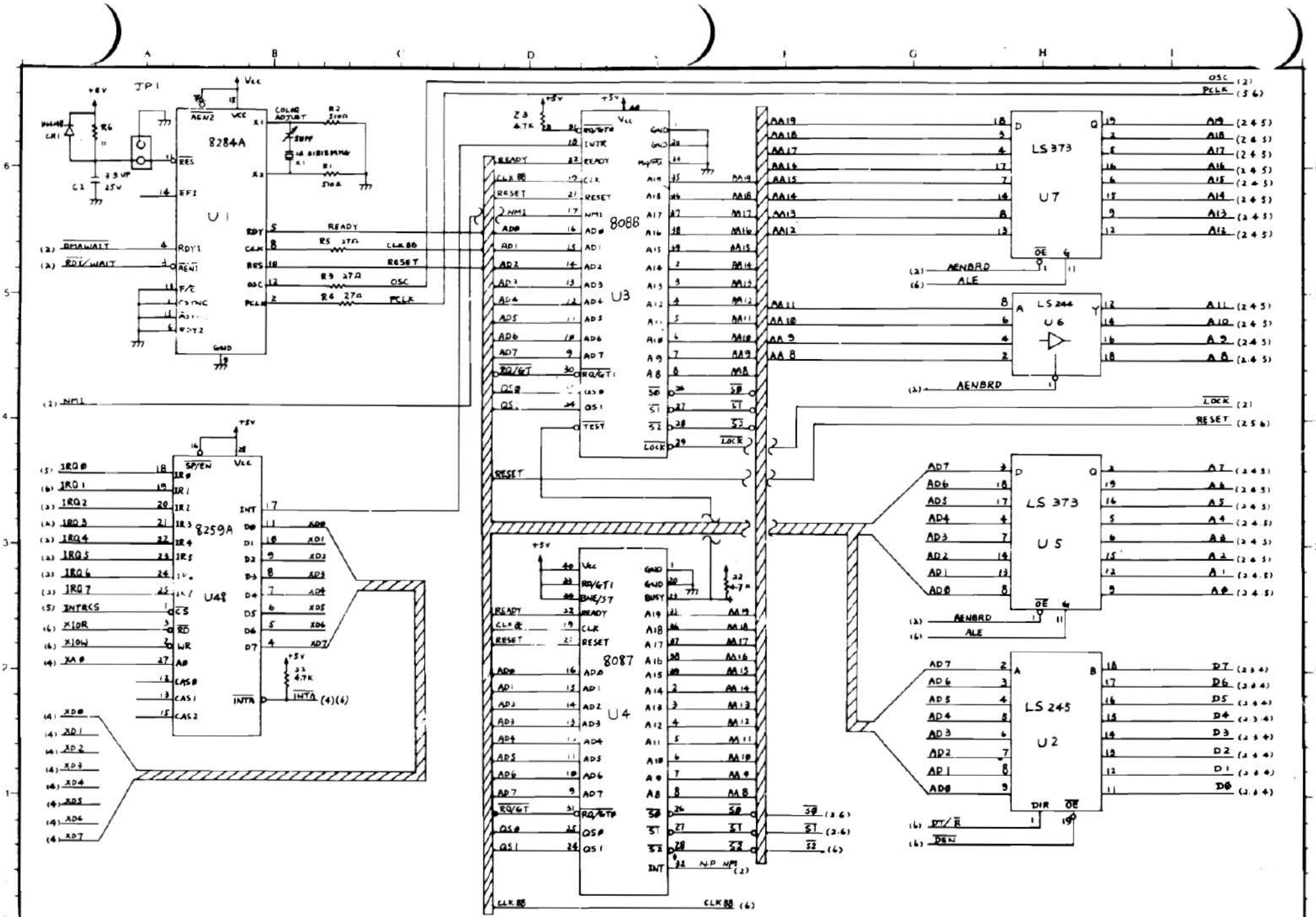
JP1
8284A
U1
RES
EFI
RDY
CLK
RES
OSC
PCLK
GND
READY
CLK88
RESET
OSC
PCLK
RDY1
AEN1
RDY2
F/C
RDYIWAIT
DMAWAIT
COLOR ADJUST
R2 150n
R1 300Ω
R5 27Ω
R3 27Ω
R4 27Ω
C2 33 UF 25V
CR1
R6
8088
U3
AD0
AD1
AD2
AD3
AD4
AD5
AD6
AD7
A19
A18
A17
A16
A15
A14
A13
A12
A11
A10
A9
A8
RD/GT
QS0
QS1
TEST
NMI
INTR
RESET
CLK
READY
MN/MX
SS0
S1
S2
LOCK
8087
U4
BUSY
INT
8259A
U48
SP/EN
INT
INTA
IR0
IR1
IR2
IR3
IR4
IR5
IR6
IR7
CS
RD
WR
A0
CAS0
CAS1
CAS2
D0
D1
D2
D3
D4
D5
D6
D7
INTRCS
XIOR
XIOW
XA0
IRQ0
IRQ1
IRQ2
IRQ3
IRQ4
IRQ5
IRQ6
IRQ7
XD0
XD1
XD2
XD3
XD4
XD5
XD6
XD7
LS 373
U7
LS 373
U5
LS 244
U6
LS 245
U2
AEN1
AEN2
AENBRD
ALE
DT/R
DEN
DIR
OE
OSC
PCLK
LOCK
RESET
NMI
CLK88
INTA
NPP NPI
AA19
AA18
AA17
AA16
AA15
AA14
AA13
AA12
AA11
AA10
AA9
AA8
A19
A18
A17
A16
A15
A14
A13
A12
A11
A10
A9
A8
AD7
AD6
AD5
AD4
AD3
AD2
AD1
AD0
D7
D6
D5
D4
D3
D2
D1
D0
+8V
+5V
Vcc
GND
22 4.7K
33 4.7K
COMPUTER XT V2
1 OF 7

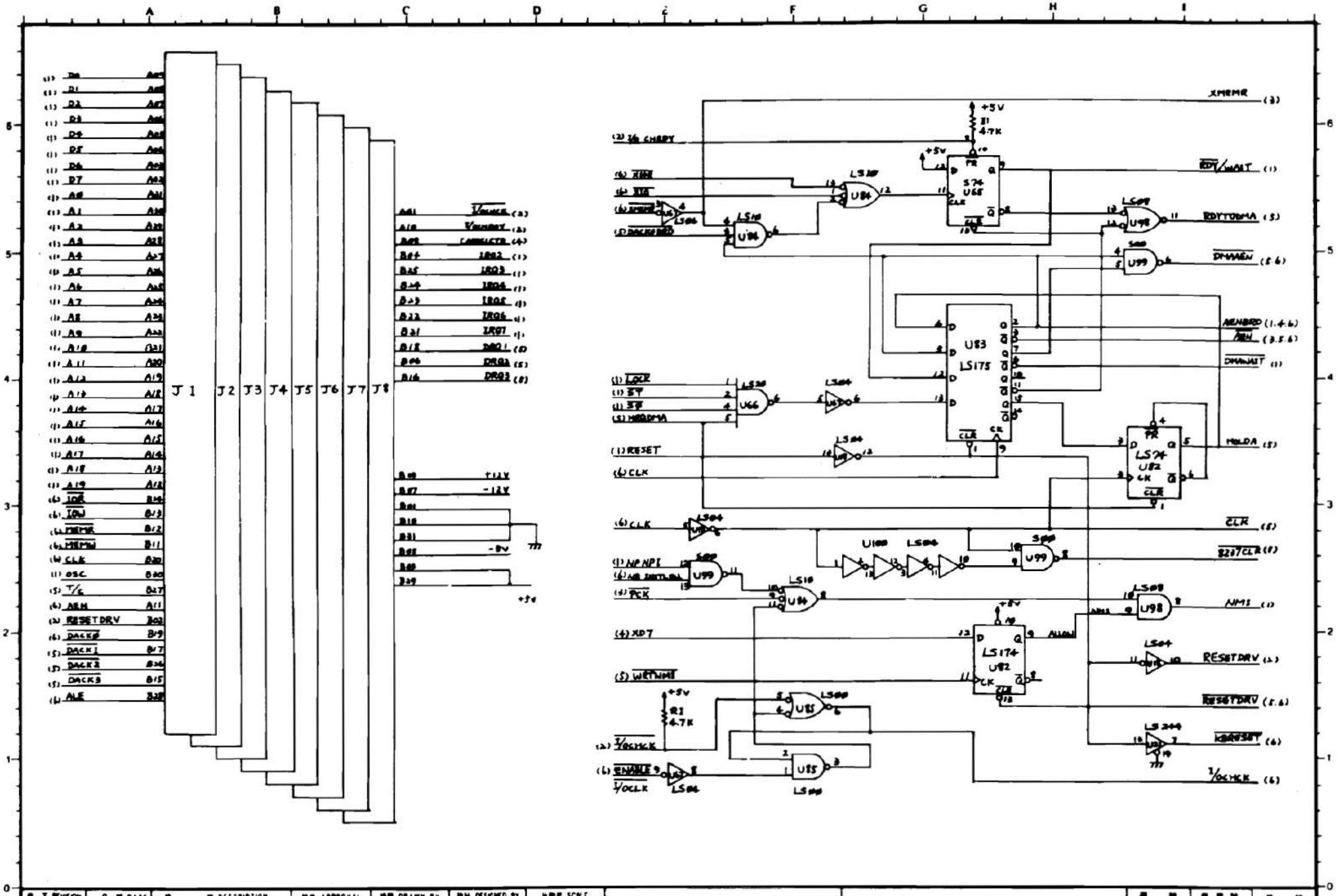

REVISION	DATE	DESCRIPTION	APPROVAL	DRAWN BY	DESIGNED BY	SCALE
				CHECKED	APPROVAL	DATE

COMPUTER XT v2

DRAWING NO

JOB NO

SHEET NO 2 OF 7

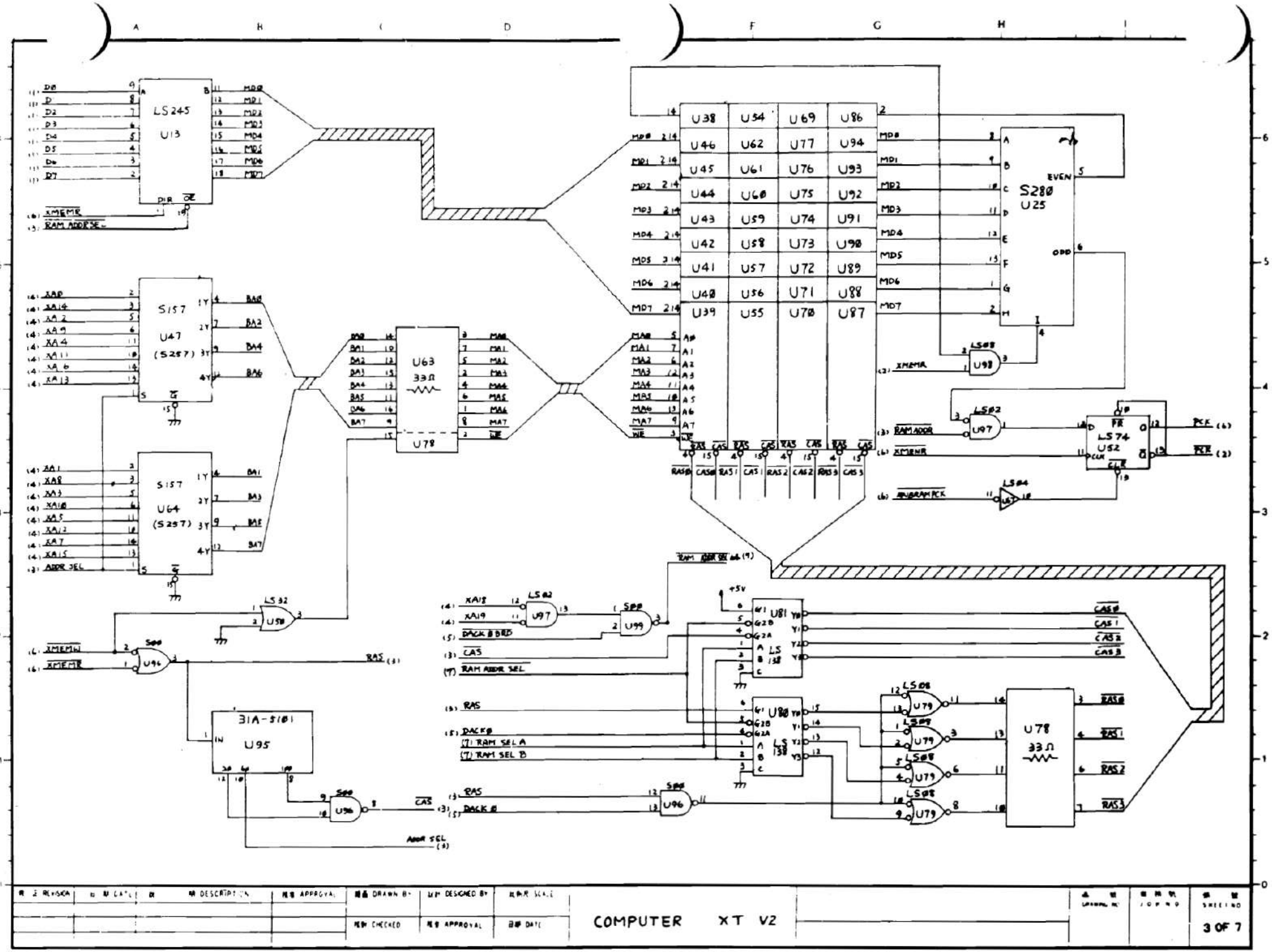
LS245
U13
S157
U47
(S257)
S157
U64
(S257)
U63
33Ω
U78
U38 U54 U69 U86
U46 U62 U77 U94
U45 U61 U76 U93
U44 U60 U75 U92
U43 U59 U74 U91
U42 U58 U73 U90
U41 U57 U72 U89
U40 U56 U71 U88
U39 U55 U70 U87
S280
U25
EVEN
ODD
LS74
U52
U81
U80
LS 138
U78
33Ω
U95
31A-5101
U96
U97
U98
U99
U79
XMEMR
XMEMW
RAS
CAS
RAM ADDR SEL
ADDR SEL
BACK B RES
BACK 0
RAM SEL A
RAM SEL B
COMPUTER XT V2
3 OF 7

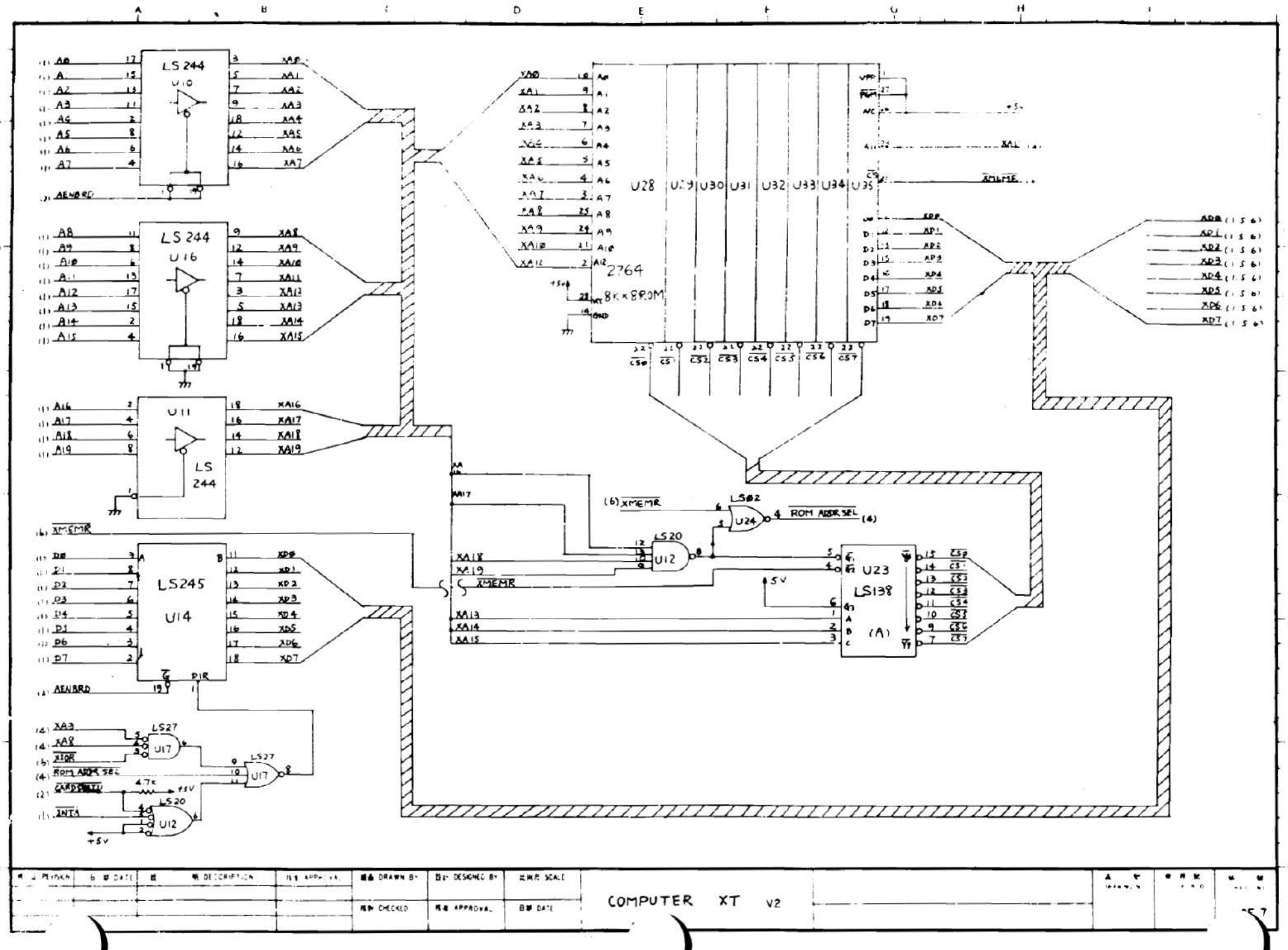

COMPUTER XT V2

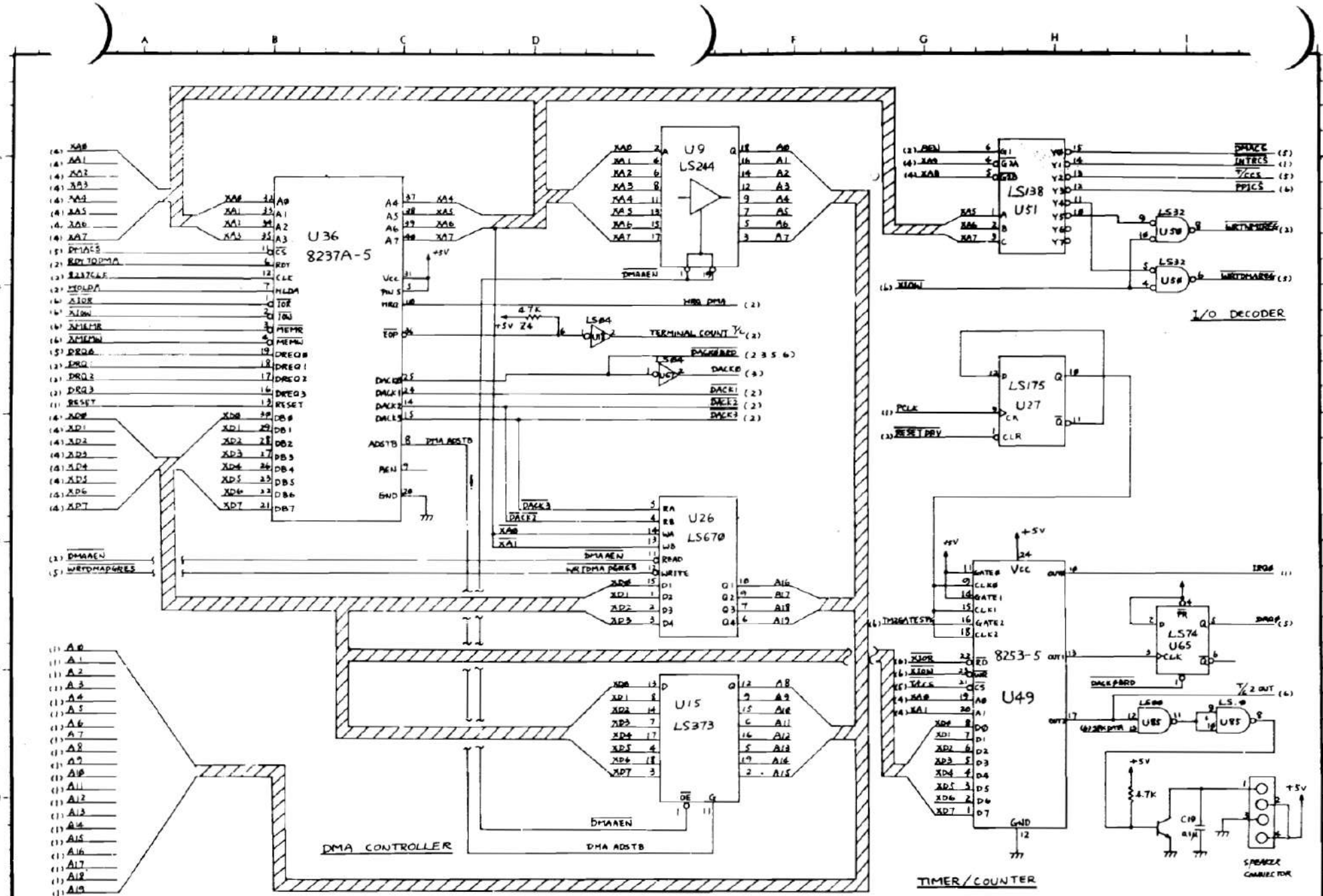

							COMPUTER XT V2		5 OF 7

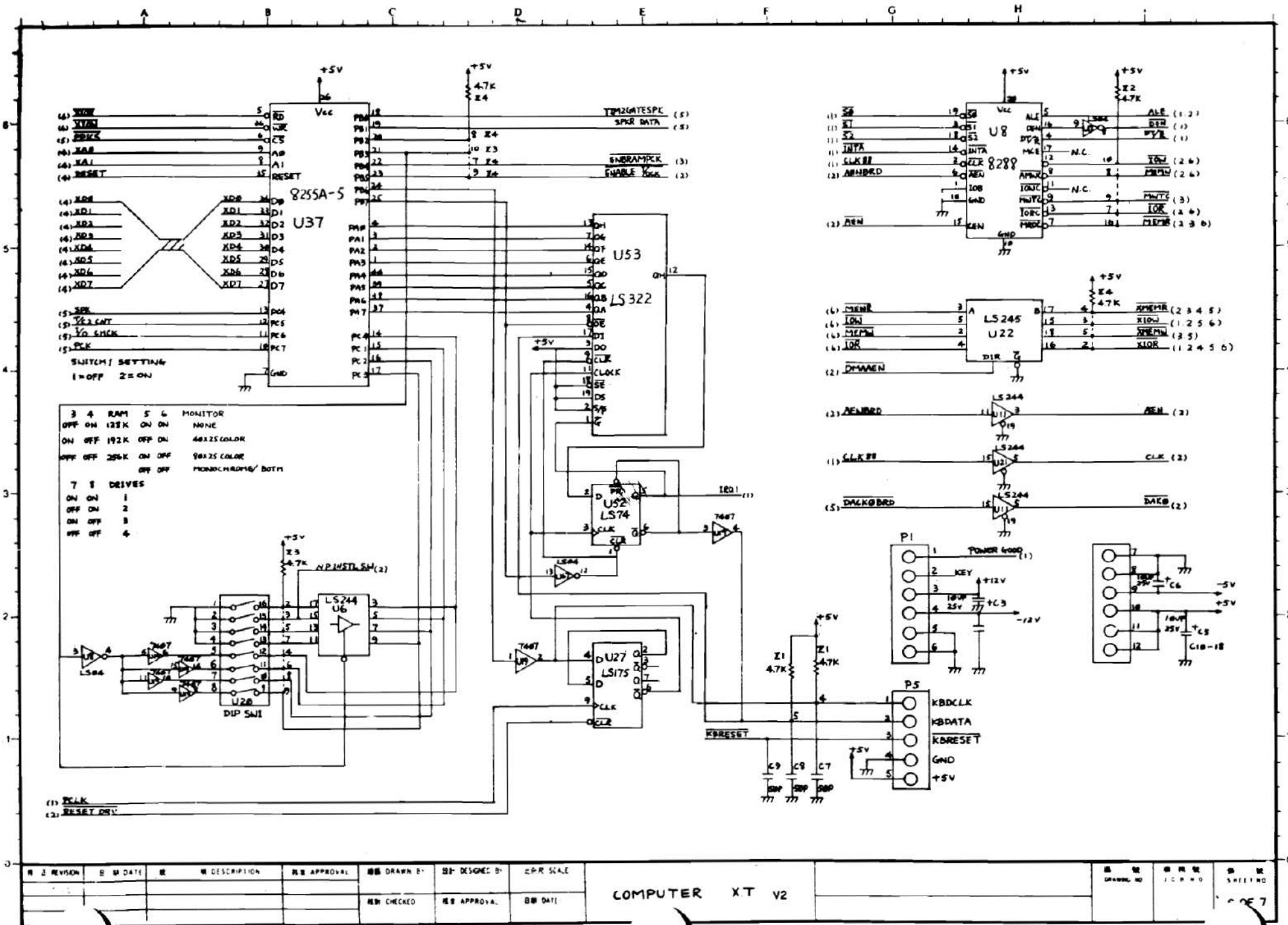
8255A-5
U37
SWITCH SETTING
1=OFF 2=ON
3 4 RAM 5 6 MONITOR
OFF ON 128K ON ON NONE
ON OFF 192K OFF ON 40X25 COLOR
OFF OFF 256K ON OFF 80X25 COLOR
OFF OFF MONOCHROME/ BOTH
7 8 DRIVES
ON ON 1
OFF ON 2
ON OFF 3
OFF OFF 4
DIP SW1
U20
LS244
U6
LS74
U52
LS322
U53
LS175
U27
8288
U8
LS245
U22
P1
P5
KEY
KBDCLK
KBDATA
KBRESET
GND
COMPUTER XT V2

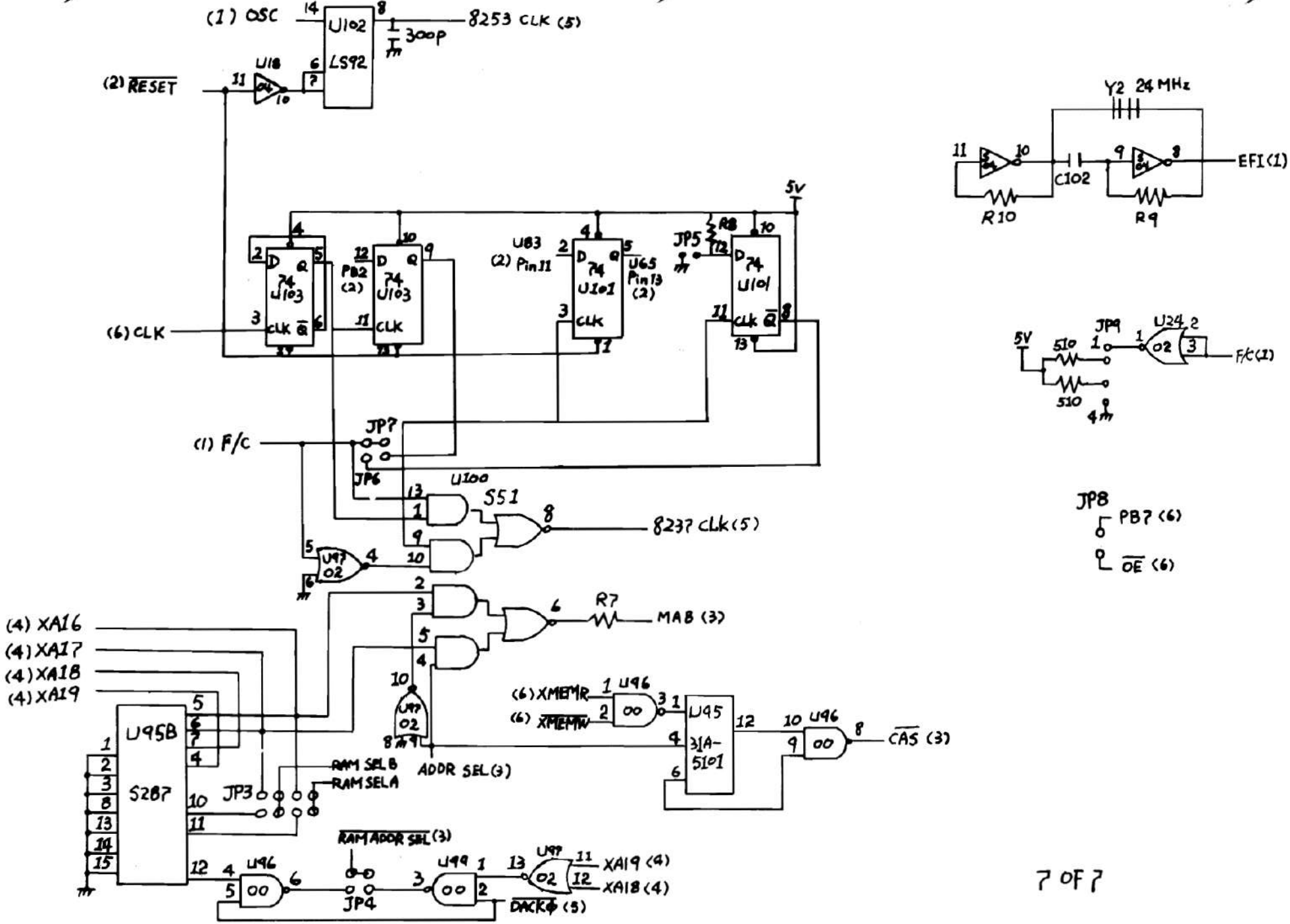
(1) OSC
U102
LS92
300P
8253 CLK (5)
U18
(2) RESET
(6) CLK
U103
PB2 (2)
U83
(2) Pin11
U101
U65 Pin13 (2)
JP5
5V
(1) F/C
JP7
JP6
U100
S51
8237 CLK (5)
U97 02
(4) XA16
(4) XA17
(4) XA18
(4) XA19
R7
MAB (3)
U95B
S287
JP3
RAM SEL B
RAM SEL A
ADDR SEL (3)
(6) XMEMR
(6) XMEMW
U96
00
U95
3IA-5101
CAS (3)
RAM ADDR SEL (3)
U99
JP4
XA19 (4)
XA18 (4)
DACK0 (5)
Y2 24 MHz
C102
R10
R9
EFI (1)
JP9
U24
510
F/C (1)
JP8
PB7 (6)
OE (6)